REPT
瑞浦兰钧

新能源动力及储能系统专家

NEW ENERGY POWER AND ENERGY STORAGE SYSTEM EXPERT

瑞浦兰钧能源股份有限公司

REPT BATTERO ENERGY CO., LTD.

Production Specification
产品规格书

Cell model 电池型号：CB75
Cell Type 电芯类型： Lithium-ion

Manufacturer 编制	Check by 审核	Approval by 批准
Zhao Yanan	Jia Congpu	Zhang Yichi
Customer Approval 客户签收：		

Copyright © REPT BATTERO Energy Co., Ltd.
瑞浦兰钧能源股份有限公司

瑞浦兰钧能源股份有限公司

Version 版本号	Date 更改时间	Description 更改内容
01	2023-02-01	新版发行
02	2024-01-02	图纸更新
03	2024-04-29	图纸更新

瑞浦兰钧能源股份有限公司

目录

1 Scope 适用范围 5
2 Reference Documents 规范性引用文件 5
3 Performance Requirements 性能指标 5
3. 1 General Information 概要 5
3.2 Charging/Parameter 充电模式/参数 7
3.3 Discharging/Parameter 放电模式/参数 7
4 Electrical Performance 电性能 8
4.1 Standard Test Conditions 标准测试条件 8
4.2 Accuracy of Test Conditions 测试设备精度 8
4.3 Electrical Performance Test 测试过程 9
5 Safety 安全性能 10
6 Cell Transportation and Storage 运输和存储 13
6.1 Transportation 运输 13
6.2 Storage 存储 13
7 Overall Dimensions 外形尺寸 14
8 Quality Assurance 质量保证 14
9 Safety Instruction 安全使用指南 15
10 Shipment Status 出货状态 16
11 Technical Support 技术支持 17

瑞浦兰钧能源股份有限公司

1 Scope 适用范围

This document is applicable to the CB75-314Ah Li-ion cell produced by REPT BATTERO Energy Co., Ltd. This document covers performance requirements, test procedures, transportation and storage requirements and other items.

本产品规格书规定了 CB75-314Ah 型锂离子电池的性能要求、试验方法、运输、贮存要求和注意事项等。

2 Reference Documents 规范性引用文件

The following documents are essential for this document. For reference documents with date, only dated versions apply to this document. For reference documents with date, the latest version (including all amendments) applies to this document.

下列文件对于本文件的应用是必不可少的。凡是注日期的引用文件，仅注日期的版本适用于本文件。凡是不注日期的引用文件，其最新版本（包括所有的修改单）适用于本文件。

GB/T 36276-2023 Lithium-ion battery for electrical energy storage 电力储能用锂离子电池

GB/T 19596 Terminology of electric vehicles 电动汽车术语

GJB 4477-2002 General specification for Li-ion batteries 锂离子蓄电池组通用规范

GB 2900.41-2008 Electrotechnical terminology primary and secondary cells and batteries 原电池与蓄电池电工术语

3 Performance Requirements 性能指标

Note: The following specifications are only available to fresh cells.
注：指标只针对于新电池

3. 1 General Information 概要

No. 序号	Item 项目	Specification 规格	Comment 备注
3.1.1	Nominal Capacity 标称容量	314Ah	25±2℃，0.5P/0.5P
3.1.2	Nominal Voltage 标称电压	3.2V	
3.1.3	Nominal Energy 标称能量	1004.8Wh	25±2℃，0.5P/0.5P

瑞浦兰钧能源股份有限公司

3.1.4	Operating Voltage 工作电压范围	2.5~3.65V	电芯温度 T>0°C
		2.0~3.65V	电芯温度 T≤0°C
3.1.5	Standard Charging Power 标准充电功率	502.4W	25±2℃，0.5P
3.1.6	Standard Discharging Power 标准放电功率	502.4W	25±2℃，0.5P
3.1.7	Working Temperature 使用温度	Charge 充电： 0°C~60°C Discharge 放电： -20°C~60°C	
3.1.8	Storage Temperature 贮存温度	-30°C~60°C	
3.1.9	Dimension 电池尺寸	Thickness 厚度: 71.75±0.8mm Width 宽度: 174.0±0.8mm Shoulder Height 肩高：204.4±0.8mm Total Height 总高: 206.8±0.8mm	Figure7
3.1.10	Cathode Material 正极材料	磷酸铁锂 Lithium-iron-phosphate	
3.1.11	Cell Weight 电池重量	5.76±0.2kg	
3.1.12	Energy Efficiency 能量效率	≥94.0%	25±2℃，0.5P
3.1.13	Energy Density 能量密度	174Wh/kg 394Wh/L	
3.1.14	IMP 电池内阻（1KHz）	≤0.3mΩ	40%SOC
3.1.15	Shipping capacity 出货容量	125.6±3Ah	40%SOC

瑞浦兰钧能源股份有限公司

3.1.16	Cycle Life 循环寿命	≥8,000 cycles ≥8000 次	The temperature is maintained at 25±2°C, cycle test by the standard charge and discharge method under 300±20Kgf preload, Fading to 70% of standard capacity. 电芯初始温度 25±2°C，且循环过程保 持周围环境温度 25±2°C，带两片钢板 夹具（17mm 厚）初始夹紧力 300±20kgf，充放电流程：0.5P 充电至 3.65V，静置 30min，0.5P 放电至 2.5V， 静置 30min，循环至标称容量的 70%

3.2 Charging/Parameter 充电模式/参数

3.2.1 Standard Charge Condition 标准充电条件

No. 序号	Item 参数	Specification 规格	Comment 条件
3.2.1.1	Standard charge power 标准充电功率	0.5P	25±2°C
3.2.1.2	Maximum continuous charge power 最大持续充电功率	0.5P	25±2°C
3.2.1.3	Standard charge voltage 标准充电电压	3.65V	
3.2.1.4	Standard charging mode 标准充电模式	0.5P constant power charge to 3.65V 0.5P 恒功率充电至电压达到上限截止电压 3.65V	
3.2.1.5	Standard charge temperature 标准充电温度	25±2°C	Cell surface temperature 电芯温度

3.3 Discharging/Parameter 放电模式/参数

No.	参数	规格	条件
3.3.1	Standard discharge power 标准放电功率	0.5P	25±2°C
3.3.2	Maximum continuous discharge power 最大持续放电功率	0.5P	

瑞浦兰钧能源股份有限公司

3.3.3	Standard discharge temperature 标准放电温度	25±2℃	Initial temperature of cell and Ambient Temperature 电芯初始温度和周围环境温度
3.3.4	Discharge temperature range 放电温度范围	-20-60℃	If the cell surface temperature is beyond this range, the discharge must be stopped 电芯温度超出放电温度范围，则停止放电

4 Electrical Performance 电性能

4.1 Standard Test Conditions 标准测试条件

The following parameters are only applicable to new products delivered to customers by REPT, not for the products after use. Storage time is less than one month and cycle number is less than 5 times

电池应为新产品(在制造后少于 1 个月储存)，循环次数少于 5 次。除非另有说明，本规范中的所有测试条件如下:

Temperature: 25±5℃, Humidity: 15%~90% RH, Pressure: 86kPa~106kPa. Room temperature is 25±2℃, 0.5P power is 502.4W in this document.

温度: 25±5℃，湿度: 15%~90% RH，气压：86kPa~106kPa。规格书中室温指的是 25±2℃，0.5P 功率为 502.4W。

4.2 Accuracy of Test Conditions 测试设备精度

(1) The accuracy of the multimeter to measure voltage should be not less than grade 0.5.
电压测量精度: ≥0.5 级.

(2) The accuracy of the multimeter to measure current should be not less than grade 0.5.
电流测量精度: ≥0.5 级.

(3) Temperature measurement precision is not lower than ±0.5℃.
温度测量精度: ±0.5℃.

(4) Time measurement precision is not lower than ±0.1%
时间测量精度: ±0.1%.

(5) Size dimension accuracy: is ±0.1%

瑞浦兰钧能源股份有限公司

尺寸测量精度: ±0.1%.

4.3 Electrical Performance Test 测试过程

No. 序号	Item 项目	Electrical Performance Test 测试过程	Standard 标准
4.3.1	Initial discharge energy 初始放电能量	1) Test temperature:25±2℃. 测试温度: 25±2℃. 2) Pretreat the cell with standard charge and discharge mode. 将电池以标准充放电模式进行预处理。 3) Charge the cell with a power at 0.5P to 3.65V. Rest 10min. 将电池以 0.5P 恒功率充电至 3.65V，搁置 10min 4) Discharge the cell with a power at 0.5P to 2.5V. Rest 10min. 将电池以 0.5P 恒功率放电至 2.5V 5) The value of the discharge energy is taken as the initial discharge energy. 取放电能量作为初始放电能量	Initial discharge energy≥1,004.8 Wh 放电能量 ≥1004.8Wh
4.3.2	High temperature charge-discharge performance 高温充放电性能	1) Initial discharge the cell in standard discharging mode. 将电池以标准放电模式初始化放电 2) Leave the cell at 45±2℃ for 5h . 将电池在 45±2℃下搁置 5h. 3) Charge with a power at 0.5P to 3.65V and record charge energy (Wh), rest 10 min. 0.5P 恒功率充电至 3.65V，记录充电能量. 4) Discharge with a power at 0.5P to 2.5V and record discharge energy (Wh), rest 10 min. 0.5P 恒功率放电至 2.5V，记录放电能量.	Charge energy ≥1,004.8Wh 充电能量 ≥ 1004.8Wh Discharge energy ≥ 1,004.8Wh 放电能量 ≥ 1004.8Wh
4.3.3	Low temperature charge-discharge performance 低温充放电性能	1) Initial discharge of the cell in standard discharging mode. 将电池以标准放电模式初始化放电 2) Leave the cell at 5±2℃ for 20h . 将电池在 5±2℃下搁置 20h. 3) Charge with a power at 0.5P to 3.65V and record charge energy (Wh), rest 10 min. 0.5P 恒功率充电至 3.65V，记录充电能量. 4) Discharge with a power at 0.5P to 2.5V and	Charge energy ≥703.36Wh 充电能量 ≥ 703.36Wh Discharge energy ≥ 703.36Wh 放电能量 ≥ 703.36Wh

瑞浦兰钧能源股份有限公司

		record discharge energy (Wh), rest 10 min. 0.5P 恒功率放电至 2.5V，记录放电能量.	
4.3.4	Cycle Life 循环寿命	1) Test temperature: 25±2℃. 测试温度: 25±2℃. 2) Preload force: 300±20kgf 初始夹紧力:300±20kgf 3) Charge with a power at 0.5P(W) to 3.65V, then stand by 30min. 以 0.5P（W）恒功率充电至 3.65V，搁置 30min. 4) Discharge with a power at 0.5P(W) to 2.5V, then stand by 30min. 将电池以 0.5 P(W)电流放电至 2.5V，搁置 30min. 5) Cycle step 3) and 4) until its capacity fading to 70% of rated capacity and record cycle number. 重复 3)和 4)步骤，直到电池容量小于 70%的额定容量，并记录循环次数。	Cycle number≥8,000 times 循环寿命≥8000 次
4.3.5	Self-Discharge 自放电率	Within three months of cell shipping. Test temperature: 25±3℃, 40%SOC storage 出货三个月以内电芯，标准充电到 40%的充电状态，25℃温度储存	≤3%/月

5 Safety 安全性能

No. 序号	Item 项目	Safety Performance Test 测试过程	Standard 标准
5.1	Drop 跌落	1) Fully charge the cell in standard charging mode. 将电池以标准充电模式充满电. 2）Terminal of cell faces down and free fall from 1.5m height to cement floor. 将电池正负极端子向下从 1.5m 高度处自由跌落到水泥地面上； 3) Observe for 1h. 观察电池 1h.	No fire or explosion or smoking or does not occur rupture at a location other than the explosion valve or pressure relief point 不起火、不爆炸、不冒烟、不在防爆阀或泄压点之外的位置发生破裂
5.2	Over-Charge 过充	1) Test temperature：25±2℃. 测试温度: 25±2℃. 1) Fully charge the cell in standard charging mode.	No fire or explosion or does not occur rupture at a location other than the

瑞浦兰钧能源股份有限公司

		将电池以标准充电模式充满电. 2) Charge with current at 0.5C for 1h or voltage at 5.475V. 将电池以 0.5C 电流充电 1h 或者电压达到 5.475V. 3) Observe for 1 h.观察电池 1h.	explosion valve or pressure relief point 不起火、不爆炸、不在防爆阀或泄压点之外的位置发生破裂
5.3	Over-Discharge 过放	1) Test temperature: 25 ±2℃. 测试温度: 25±2℃. 2) Fully discharge the cell in standard discharging mode. 将电池以标准放电模式放空. 3) Discharge with current at 0.5C for 1h or to 0 V. 将电池以 1C 电流放电 1h 或电压达到 0V. 4) Observe for 1 h.观察电池 1h.	No fire or explosion or leakage or smoking or does not occur rupture at a location other than the explosion valve or pressure relief point 不起火、不爆炸、不漏液、不冒烟、不在防爆阀或泄压点之外的位置发生破裂
5.4	Short Circuits 短路	1) Test temperature：25±2℃. 测试温度: 25±2℃. 2) Fully charge the cell in standard charging mode. 将电池以标准充电模式充满电. 3) Adjust the resistance of the test device for the central position of the connection between the short-circuit test device and the positive electrode of a cell to [0.8, 1.0] mΩ, and adjust the connection between the short-circuit test device and the positive electrode of a cell until the contact resistance of the positive electrode is less than or equal to 0.1mΩ; Adjust the connection between the short-circuit test device and the negative electrode of the cell until the contact resistance of the negative electrode is less than or equal to 0.1mΩ. 调节短路试验装置与电池单体正极连接处中心位置到短路试验装置与电池单体负极连接处中心位置之间的试验装置电阻至[0.8，1.0]mΩ，调整短路试验装置与	No fire or explosion or does not occur rupture at a location other than the explosion valve or pressure relief point 不起火、不爆炸、不在防爆阀或泄压点之外的位置发生破裂

瑞浦兰钧能源股份有限公司

		电池单体正极的连接状态至正极接触电阻小于等于 0.1mΩ；调整短路试验装置与电池单体负极的连接状态至负极接触电阻小于等于 0.1mΩ； 4) External short circuit cell for 10 min. 将电池经外部短路 10min. 5) Observe for 1h. 观察电池 1h.	
5.5	Squeeze 挤压	1) Fully charge the cell in standard charging mode 将电池以标准充电模式充满电. 2) Squeeze direction: perpendicular to the direction of the cell plate, or the same direction that the cell is most likely to be crushed in vehicle; Dimension of Squeeze plate: semi-cylinder with a radius of 75mm, the length (L) of the semi-cylinder is greater than the size of the extruded cell; speed: 5mm/s; terminal condition: force reaches 50 kN then hold for 10min. 挤压方向：垂直于电池单体极板方向施压，或与电池单体在整车布局上最容易受到挤压的方向相同；挤压板形式：半径 75 mm 的半圆柱体，半圆柱体的长度（L）大于被挤压电池单体的尺寸；挤压速度：5mm/s；挤压程度：挤压力达到 50 kN 后保持 10min； 3) Observe for 1h. 观察 1h.	No fire or explosion or leakage or smoking or does not occur rupture at a location other than the explosion valve or pressure relief point 不起火、不爆炸、不漏液、不冒烟、不在防爆阀或泄压点之外的位置发生破裂
5.6	Thermal Runaway 热失控	Test method follows GB/T36276-6.7.4.2.1. 试验方法参照 GB/T36276-6.7.4.2.1	No fire or explosion or does not occur rupture at a location other than the explosion valve or pressure relief point 不起火、不爆炸、不在防爆阀或泄压点之外的位置发生破裂

Description of service conditions: safety test, cycle life test and pack design need to add preload force, and the range of preload force of cell is 500N~5,000N, the recommended preload tolerance is ±200N.

瑞浦兰钧能源股份有限公司

使用条件说明：安全测试、寿命测试、系统成组设计需要施加预紧力，电芯的预紧力范围为500N~5000N，建议的预紧力控制公差为±200N。

6 Cell Transportation and Storage 运输和存储

6.1 Transportation 运输

Transport the cell in forms of package by truck, railway, ship or airplane. Severe vibration, impact, crush, exposure to the sun and rain during transportation should be avoided. The SOC of cell should be kept between 30-40%.

应根据运输的目的地和运输方式，选定合适的电池包包装方式。在运输过程中应防止剧烈振动、外力冲击或挤压，防止日晒雨淋，可使用车、火车、轮船、飞机等交通工具进行运输，在运输过程中应保持 30-40%的电量。

6.2 Storage 存储

Store the cell in a clean, dry, and well-ventilated location with ambient temperature between -30℃~60℃, better between -10℃ and 40℃. In addition, relative humidity of 10%RH ~90%RH. Keep away from corrosive materials and magnetic field, fire and heat sources. Do not upside down, crush and press. If battery is not in use, total storage time is not recommended for more than 3 months.

电池应存储允许环境温度为-30~60℃，建议保存温度为-10~40℃，相对湿度为10%RH ~90%RH 的条件下。电池应避免与腐蚀性物质或磁性环境接触，电池存储在清洁、干燥、通风的环境中，远离火源及热源。电池不使用时，连续存放建议不超过 3 个月。

瑞浦兰钧能源股份有限公司

7 Overall Dimensions 外形尺寸

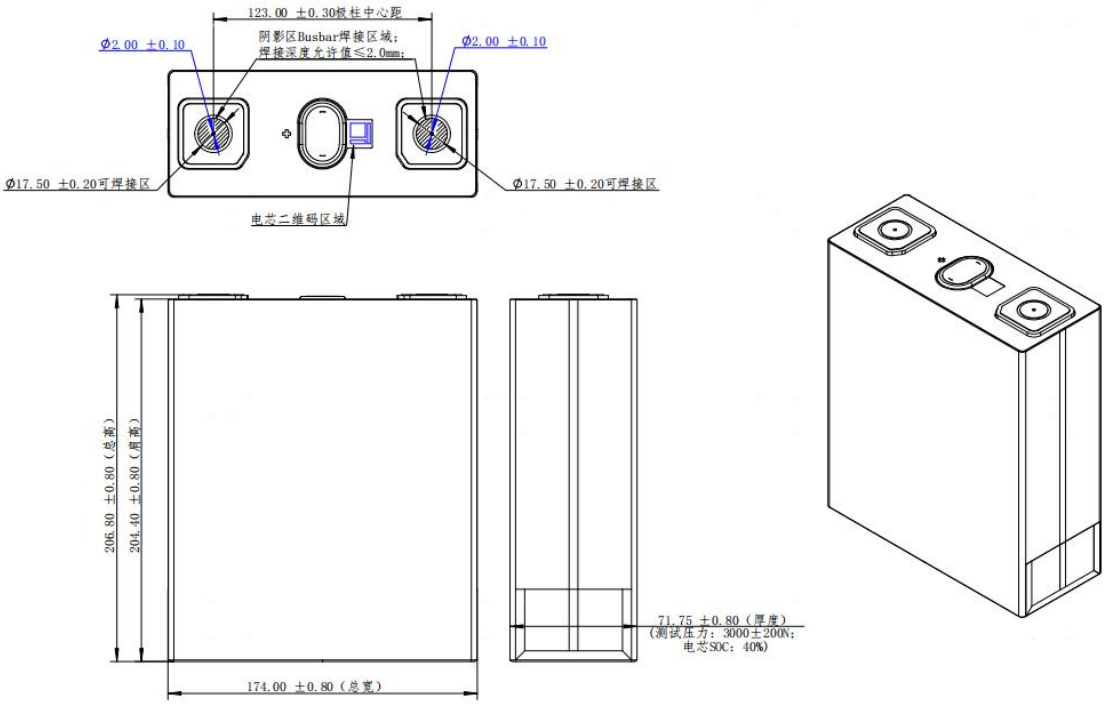

图 7.1 电池尺寸/mm

8 Quality Assurance 质量保证

The warranty period follows the contract. However, even though the problem occurs within warranty period, REPT will not replace a new cell for free as long as the pro misusage, not the failure of REPT's manufacturing/shipping process, is the cause.

电池的保质期限依商务合同而定。在此期限内，如果非制造厂商的制程和品质管理原因，而是用户误用造成的电池问题，瑞浦兰钧能源股份有限公司可提供技术指导意见，不承诺免费更换服务。

REPT will not undertake responsibility under the following situations.

瑞浦兰钧能源股份有限公司对以下几种情况产生的问题及安全事故不承担任何责任：

1) Issues and safety accidents caused by the violation of safety instruction.
违反安全使用指南所产生的问题及安全事故；

2) Bad cell during assembly by customer after delivery.
出货后用户在电池组装过程中产生的不良电池；

3) Issues caused by the connection of cell, circuit and cell charger.
电池与电路、电池组和充电器搭配使用所产生的问题。

瑞浦兰钧能源股份

For safety consideration, the customer should contact REPT in advance if other special applications are needed, especially equipment design, Li-ion cell system circuit protection, high current and so on.

为了安全起见，如有配套设备设计、锂离子电池系统保护电路或大电流等其它方面的特殊应用，请先咨询瑞浦兰钧能源股份有限公司相关事宜。

9 Safety Instruction 安全使用指南

Read the following advice carefully to ensure the right use of REPT Prismatic lithium-ion cell.

为避免滥用方形锂离子电池模块造成的电池损害或人身伤害，在使用方形锂离子电池之前，请认真阅读下面的安全指南：

CAUTION 警告!

1) Risk of fire, explosion, and burns. Do not disassemble, crush, heat the cell or dispose it into fire;

电池非正确使用和存放具有火灾、爆炸和烧伤的风险，勿将电池分解、压碎、焚化、加热和投入火中；

2) Keep the cell out of reach of children and do not remove the original package before use. Dispose the used cell according to local recycling or waste disposition regulations;

将电池置于儿童能接触的范围之外，使用之前不得将电池原包装移除，应根据当地的回收或废弃物法规及时处理废旧电池；

3) Replace the cell manufactured by the same manufacture only. Mixed use of cells from other manufacture might cause fire and explosion;

如需更换电池，应使用同一制造商生产的电池， 使用其他制造商提供的电池可能存在起火和爆炸的风险;

4) Do not throw the cell into water or make it wet;
勿将电池投入水中或将其弄湿；

5) Do not connect positives and negatives with metal cover;

勿将电池正负极与金属壳体同时接触；

6) Do not make the cell short circuit, over-charge or over-discharge;

勿将电池短路、过充或过放；

7) Do not use or store the cell near the heat source (such as fire or heater):

勿在热源(如火或加热器) 附近使用或贮存电池；

瑞浦兰钧能源股份有限公司

8) Do not connect the position (+) and negative (-) terminals in the opposite way;

勿将电池正负极接反；

9) Do not put the cell together with coin, metal jewelry and other metal objects;

勿将电池与硬币，金属饰品或其它金属物品放置在一起；

10) Do not pierce the cell with nails or other sharp objects. Do not hammer or stamp on the cell;

勿用钉子或其它尖锐物体刺穿电池壳体，禁止锤击或脚踏电池；

11) Do not weld the cell directly;

勿直接焊接电池；

12) Do not disassemble or modify the cell in any way;

勿擅自以任何方式拆卸或修整电池；

13) Do not hit, throw or cause the cell to suffer mechanical vibration and sudden fall;

勿撞击、投掷或者使电池受到机械震动及自然跌落；

14) Do not use different types and brands of cell in one application;

勿将不同种类、不同品牌的锂离子电池混合使用；

15) Do not connect the negative pole with the shell which is positive;

勿将负极柱与壳体(正电性)相连；

16) Stop using the cell and relocate the cell to a safe place if the cell gives off peculiar smell, experiences temperature increase, deforms, color change or any other abnormal phenomena.

如果电池发出异味、发热、变形、变色或出现其它任何异常现象时不得使用并将电池转移出使用环境；

17) If cell catches fire, use dry powder, foam fire extinguisher or sand to extinguish flames and remove it from the operating environment;

如果电池起火，需用干粉、泡沫灭火器、沙子等熄灭并远离使用环境。

10 Shipment Status 出货状态

The cells should be shipped with 40% SOC if customer has no special requirements.

瑞浦兰钧能源股份有限公司

客户若无特殊要求，电池出厂时具有 40%左右的电量。

11 Technical Support 技术支持

Manufacturer: REPT BATTERO Energy Co., Ltd.

制造商：瑞浦兰钧能源股份有限公司

Address: No. 205, Binhai 6th Road, Airport New Area, Longwan District, Wenzhou City, Zhejiang Province.

地　址：浙江省温州市龙湾区空港新区滨海六路 205 号

瑞浦兰钧能源股份有限公司